VROOM DRAG MEET 2W / 4W

13TH EDITION

SUPPLEMENTARY REGULATIONS
2W & 4W

ORGANISED BY

Vroom, Bengaluru

In Association with

OFFICIAL MOBILE APLLICATION https://rrs.events/vroom-dragmeet **(IOS / ANDROID)**

OFFICIAL WEBSITE: www.vroomgeneva.com

QR code of Official Mobile Application for download

Supplementary Regulations

Approved by

WARNING

MOTORSPORT CAN BE DANGEROUS. DESPITE ORGANIZERS TAKING ALL POSSIBLE PRECAUTIONS UNAVOIDABLE ACCIDENTS MAY HAPPEN. YOU ARE PRESENT HERE AT YOUR OWN RISK.

TABLE OF CONTENTS

1. INTRODUCTION 4

2. ORGANIZATION 5

3. PROGRAMME 6

4. ENTRIES 7

5. INSURANCE 13

6. ADVERTISEMENT AND IDENTIFICATION 13

7. ADMINISTRATIVE CHECKS 13

8. PRE-EVENT SCRUTINEERING, SEALING AND MARKING 14

9. IDENTIFICATION OF OFFICIALS 15

10. PRIZES 15

11. PROTEST, APPEAL & RESULTS 15

12. RUNNING OF THE EVENT 17

13. PENALITIES 18

14. SAFETY REQUIREMENTS 18

NAMES AND PHOTOGRAPHS OF CRO'S 19

Name of the event	VROOM DRAG MEET 13TH EDITION
Start Date of the event	12th Dec 2025
End Date of the event	14th Dec 2025
Status of the event	OPEN
Category	2W / 4W
Name of the Organizer	VROOM
Address	#638/669 ; 4TH FLOOR 1ST STAGE 2ND BLOCK HBR LAYOUT BENGALURU - 560043
Phone	9986450500
Email	tariq.m@vroomgeneva.com
Website	www.vroomgeneva.com
Name of the Organizer	SPEEDWAY MOTORSPORTS , HYDERABAD
Address	LEGEND CHAWLA APTS ; ROAD NO 5 ; BANJARA HILLS , HYDERABAD
Phone	9246526520
Email	mandeep_dhingra@hotmail.com, speedwaymotorsportshyd@gmail.com
Website	www.speedwaymotorsports.co.in

1. Introduction

1.1 The VROOM DRAG MEET 13TH EDITION is run in compliance with the **2025** International Sporting Code of the Federation Internationale de l' Automobile (FIA), **2025** FMSCI General Prescriptions for Drag Racing, the relevant Drag Technical Regulations and these Supplementary Regulations (SRs).

The Federation of Motor Sports Clubs of India (FMSCI) is the National Sporting Authority (ASN) of FIA and FIM in India.

Modifications, amendments and / or changes to these SRs will be announced only by numbered and dated bulletins, issued by the organizers, approved by the FMSCI or Stewards.

1.2 Acquaintance with and submission to Rules
Every person, or group of persons, organizing a competition or taking part therein

- Shall be deemed to be acquainted with all the relevant rules and regulations of the FMSCI
- All competitors must sign the indemnity and declaration form, which are enclosed with the Entry Form
- These are the precedent conditions attached to the submission of entries taking part in an event. All competitors participating shall be bound by the abovesaid conditions and to the rules and regulations hereinset out or amendments made thereto.

- Shall undertake to submit themselves without reservations to the above and to the decision and consequences resulting therefrom.

2. Organization

2.1 **FMSCI Permit No./s**:

2.2 **Organizers name, address and contact detail**

Error! Reference source not found. Vroom Motorsports In Association with Speedway otorsports, Hyderabad

Error! Reference source not found.#638/669 ; 4TH FLOOR 1ST STAGE 2ND BLOCK HBR LAYOUT BENGALURU 560043

Error! Reference source not found.9986450500 REF orgemail \h * MERGEFORMAT **Error! Reference source not found.**tariq.m@vroomgeneva.com

Error! Reference source not found.www.vroomgeneva.com

2.3 **Managing Committee**

S MANDEEP SINGH DHINGRA	TARIQ MOHSIN	ABRARULLA
KHALID MOHSIN		

2.4 **Organizing Committee**

MOHAMMED ANAS JAVEED	KAMESH CHANDER	NAWAZUDDIN
HIDAYATULLA	SHABBIR AHMED	

2.5 **FMSCI Officials**

Chief Steward	MR TBA
Steward	MR TBA
Steward	DR I VENKAT RAO
Chief Scrutineer	MR TBA 4W / MR PRATHEEK BHANDI 2W

2.6 **Senior Officials**

Clerk of the Course	S MANDEEP SINGH DHINGRA
Assistant Clerk of the Course	TARIQ MOHSIN
Secretary of the Meet	KAMESH
Chief Safety Officer	ABDUL MATEEN
Chief Medical Officer	DR IZHAR ALI
Chief Time Keeper	SAMIR SUNEJA
Competitors Relations Officer	TARIQ MOHSIN
Media Relations Officer	MOHAMMED ANAS
Results Co-ordinator	KAMESH

Sustainability Officer	TBA (with mobile number)
ASST SCRUTINEER 4W ASST SCRUTINEER 4W ASST SCRUTINEER 2W ASST SCRUTINEER 2W PADDOCK IN-CHARGE ASST PADDOCK IN-CHARGE ASST PADDOCK IN-CHARGE PARC FERME IN-CHARGE ASST. PARC FERME IN-CHARGE	MARK SANJAY TBA TBA TBA SAAD KHAN MJ SHABBIR ALI JAMEEL RIZWAN TBA
LEFT / RIGHT LANE MARSHALL FLYING FINISH / HOLDING AREA	TBA ABDUL MATEEN / AZAM
SECRETARY TO THE STEWARDS	MOHAMMED HIDAYATHULL SHARIEF

2.7 **Location of HQ**

From:

Day	DD / MM / YYYY	Time (hrs)	Venue
THURSDAY	20TH NOV 2025	16:00	#638/669 ; 4TH FLOOR 1ST STAGE 2ND BLOCK HBR LAYOUT BENGALURU - 560043

To:

THURSDAY	11th Dec 2025	16:00	#638/669 ; 4TH FLOOR 1ST STAGE 2ND BLOCK HBR LAYOUT BENGALURU - 560043

From:

Day	DD / MM / YYYY	Time (hrs)	Venue
FRIDAY	12TH DEC 2025	10:00 HRS	TAAL AEROSPACE ; HOSUR

To:

SUNDAY	14TH DEC 2025	18:00	TAAL AEROSPACE ; HOSUR FRIDAY - 18TH APRIL 2025

3. Programme

FRIDAY - 12th Dec 2025	
Time	**Details**
08:00 hrs	DOCUMENTS VERIFICATION , ISSUING ID & COMP. NO'S ETC
09:00 hrs	SCRUTINY OPEN FOR ALL 2W & 4W
14:00 hrs	LUNCH FOR ALL
15:00 hrs	FIRST STEWARDS MEETING
18:45 hrs	STEWARDS TRACK INSPECTION
19:00 hrs	TRACK CLOSED & SCRUTINY CLOSE
hrs	

hrs	
hrs	
hrs	

SATURDAY13th Dec 2025	
Time	**Details**
08:00 to 12:30 hrs	SCRUTINY OPEN FOR ALL 2W & 4W (FOR OUTSTATION PARTICIPANTS ONLY EXCEPT BANGALORE) & NOT FOR CLASSES RUNNING ON SATURDAY
08:00 hrs	RIDER'S / DRIVERS BRIEFING
09:00 hrs	OFFICIAL PRACTICE OPEN
10:30 hrs	OFFICIAL PRACTICE CLOSE
11:00 hrs	START OF DRAG - CLASSES- 2W - A,B,C1,C2,C3,C4 , F 4W - I1A,I2A,I3A,I4A,I5A, I6A ,L1,L2,L3,L5,L7,L8,L9, - AS PER START ORDER
14:00 hrs	LUNCH FOR ALL
18:00 hrs	TRACK CLOSED
hrs	PRIZE DISTRIBUTION - DATE & VENUE - TBA
hrs	
hrs	

SUNDAY , 14th Dec 2025	
Time	**Details**
08:00 hrs	RIDER'S / DRIVERS BRIEFING (ONLINE / OFFLINE)
11:00 hrs	OFFICIAL PRATICE OPEN
12:30 hrs	OFFICIAL PRATICE CLOSE
12:31 hrs	START OF DRAG - CLASSES - 2W - D,E,C5,C6,C7 4W - I7A TO I9A, L4 & L6 , K1 TO K9, M1 TO M3,N1,R,Q - AS PER START ORDER
14:00 hrs	LUNCH FOR ALL
18:00 hrs	TRACK CLOSED
hrs	PRIZE DISTRIBUTION - DATE & VENUE - TBA
hrs	
hrs	
hrs	

4. Entries

4.1 **Opening and Closing Dates**

Entries open with the publication of these Supplementary Regulations

Closing date of all entries: Opening of entries 20th Nov 2025 Closing of entries 10th Dec 2025 20:00 Hrs . Closing of late entries 12th Dec 2025 14:00 Hrs. For late entry 50 % of the original entry fee will be charged extra . Withdrawal of entry : 12th Dec 2025 - 15:00 Hrs. Documentation check, issuing of ID Cards & Competition Numbers Stickers etc – 18th April 2025

Participants must fill up the Official Entry Form online available on our Official Mobile Application, https://rrs.events/vroom-dragmeet (IOS / ANDROID) or www.vroomgeneva.com , by the appropriate closing dates. @ hrs

4.2 **Entry Procedure**

Those wishing to take part in the event must send the enclosed entry form duly completed to the permanent secretariat address given in Art.2.2 prior to the closing date as mentioned in Art.4.1

4.3 **Maximum number of Entries**

The maximum number of entries accepted would be no more than 600. If more entries than these are received, then the organizers reserve the right to decide which entries would be accepted.

4.4 **Category, Groups &Classes& Entry Fees**

4.4.1 : Minimum number of Entries for each class is 6, However if insufficient entries have been received for a class, the Organizer's reserve the right to cancel or abandon that class in liason with the Stewards of the Event if they feel appropriate.

4.4.2 : Maximum of 2 Drivers/Riders are allowed to participate for each vehicle in any Category. A participant cannot take part in multiple Bikes/Cars in a single class.

FMSCI APPROVED CLASSES 2 WHEELERS

☒ **2 Wheelers: Scooters: Super Sport – Class A**	
Class	**Entry Fees**
☒ Upto 80 cc – A1	4500 + 18% GST
☒ Above 80cc – 110 cc – A2	4500 + 18% GST
☒ Above 110cc – 160 cc – A3	4500 + 18% GST
☒ Above 160cc – A4	4500 + 18% GST

☒ **2 Wheelers: 2 Stroke: Super Sport – Class B**	
Class	**Entry Fees**
☒ Upto 130 cc – B1	4500 + 18% GST
☒ Above 130cc – 165 cc – B2	4500 + 18% GST
☒ 350 cc and above – B3	4500 + 18% GST

☒ **2 Wheelers: 4 Stroke: Super Sport – Class C**

Class	Entry Fees
☒ Upto 165 cc - C1	4500 + 18% GST
☒ Above 165cc – 225 cc – C2	4500 + 18% GST
☒ Above 225cc – 360 cc – C3	4500 + 18% GST
☒ Above 360cc – 550 cc – C4 Single Cylinder	4500 + 18% GST
☒ Above 360cc – 550 cc – C4 Twin Cylinder	4500 + 18% GST
☒ Above 550cc – 850 cc – C5	4500 + 18% GST
☒ Single / Twin 551 cc – 750 cc – C6	4500 + 18% GST
☒ Single / Twin Above 750cc – C7	4500 + 18% GST

☐ **2 Wheelers: 4 Stroke: Super Sport INDIAN – Class C I**	
Class	**Entry Fees**
☐ Upto 165 cc – CI1	
☐ Above 165cc – 225 cc – CI2	
☐ Above 225cc – 360 cc – CI3	
☐ Above 360cc– 550 cc – CI4	
☐ Above 550cc – 850 cc – CI5	
☐ Single / Twin 551 cc – 750 cc – CI6	
☐ Single / Twin Above 750cc – CI7	

☒ **2 Wheelers: 4 Stroke: Super Sport – Class D**	
Class	**Entry Fees**
☒ 851 cc – 1050 cc -D1	6500 + 18% GST
☒ Above 1050cc –1650 cc - D2	6500 + 18% GST
☒ Above 1650cc – D3	6500 + 18% GST

☒ **2 Wheelers: Unrestricted – Class E**	
Class	**Entry Fees**
☒ Upto 395 cc – E1	6000 + 18% GST
☒ Above 395cc - 550 cc – E2	7500 + 18% GST
☒ Above 550cc – E3	7500 + 18% GST

PROMOTER CLASSES

☒ **2 Wheelers:Class F**

Class	Entry Fees
Vroom Naked Bike Open F1	5000 + 18% GST
Vroom 4 Stroke Upto 500 CC F2	5000 + 18% GST
Vroom Jawa / Yezdi 2 Stroke Open F3	5000 + 18% GST
Vroom 2 Stroke Open Upto 200 CC F4	6500 + 18% GST

☐ **2 Wheelers: 4 Stroke: Super Stock INDIAN – Class S**	
Class	**Entry Fees**
☐ Upto 165 cc - S1	
☐ Above 165cc – 225 cc – S2	
☐ Above 225cc – 360 cc – S3	
☐ Above 360cc – 550 cc – S4	
☐ Above 550cc – 850 cc – S5	
☐ Single / Twin 551 cc – 750 cc – S6	
☐ Single / Twin Above 750cc – S7	

FMSCI APPROVED CLASSES 4 WHEELERS

☐ **4 Wheelers: Racing Class: Class G**	
Class	**Entry Fees**
☐ TC1 – G1	
☐ TC2 – G2	
☐ TC3 – G3	
☐ TC4 – G4	
☐ TC5 – G5	

☐ **4 Wheelers: Formula Cars: Class H**	
Class	**Entry Fees**
H1	
H2	
H3	
H4	
H5	

☐ **4 Wheelers : Street Stock Petrol: Class I (Two Wheel Drive)**

Class	Entry Fees
☐ Upto 1150 cc – I1	
☐ 1151 cc – 1450 cc – I2	
☐ 1451 cc – 1650 cc – I3	
☐ 1651 cc – 2050 cc – I4	
☐ 2051 cc – 2550 cc – I5	
☐ 2551 cc – 3060 cc – I6	
☐ 3061 cc – 4002 cc – I7	
☐ 4003 cc – 5100 cc – I8	
☐ 5101cc and above – I9	

☒ **4 Wheelers Street Stock Petrol: Class (Two Wheel Drive+ Four wheel drive)**	
Class	**Entry Fees**
☒ Upto 1150 cc – I1a	6500 + 18 % GST
☒ 1151 cc – 1450 cc – I2a	6500 + 18 % GST
☒ 1451 cc – 1650 cc – I3a	6500 + 18 % GST
☒ 1651 cc – 2050 cc – I4a	6500 + 18 % GST
☒ 2051 cc – 2550 cc – I5a	6500 + 18 % GST
☒ 2551 cc – 3060 cc – I6a	6500 + 18 % GST
☒ 3061 cc – 4002 cc – I7a	8500 + 18 % GST
☒ 4003 cc – 5100 cc – I8a	8500 + 18 % GST
☒ 5101cc and above – I9a	8500 + 18 % GST

☐ **4 Wheelers: Street Stock Diesel: Class J (Two wheel drive+ Four wheel drive)**	
Class	**Entry Fees**
☐ Upto 1150 cc – J1a	
☐ 1151 cc – 1450 cc – J2a	
☐ 1451 cc – 1650 cc – J3a	
☐ 1651 cc – 2050 cc – J4a	
☐ 2051 cc – 2550 cc – J5a	
☐ 2551 cc – 3060 cc – J6a	
☐ 3061 cc – 4002 cc – J7a	
☐ 4003 cc – 5100 cc – J8a	
☐ 5101cc and above – J9a	

☒ **4 Wheelers: Pro Stock Petrol: Class K**	
Class	**Entry Fees**
☒ Upto 1150 cc – K1	6500 + 18 % GST
☒ 1151 cc – 1450 cc – K2	6500 + 18 % GST

☒ 1451 cc – 1650 cc – K3	6500 + 18 % GST
☒ 1651 cc – 2050 cc – K4	6500 + 18 % GST
☒ 2051 cc – 2550 cc – K5	6500 + 18 % GST
☒ 2551 cc – 3060 cc – K6	6500 + 18 % GST
☒ 3061 cc – 4002 cc – K7	8500 + 18 % GST
☒ 3061 cc – 4002 cc – K7A (ONLY TWO WHEEL DRIVE)	8500 + 18 % GST
☒ 4003 cc – 5100 cc – K8	8500 + 18 % GST
☒ 5101cc and above – K9	8500 + 18 % GST

☒ **4 Wheelers: Pro Stock Diesel: Class L**	
Class	**Entry Fees**
☒ Upto 1150 cc – L1	6500 + 18 % GST
☒ 1151 cc – 1450 cc – L2	6500 + 18 % GST
☒ 1451 cc – 1650 cc – L3	6500 + 18 % GST
☒ 1651 cc – 2050 cc – L4	6500 + 18 % GST
☒ 2051 cc – 2550 cc – L5	6500 + 18 % GST
☒ 2551 cc – 3060 cc – L6	6500 + 18 % GST
☒ 3061 cc – 4002 cc – L7	8500 + 18 % GST
☒ 4003 cc – 5100 cc – L8	8500 + 18 % GST
☒ 5101cc and above – L9	8500 + 18 % GST

☒ **4 Wheelers : Indian Open: Class M**	
Class	**Entry Fees**
☒ Upto 2750 cc – M1	8500 + 18 % GST
☒ Upto 4002 cc – M2	8500 + 18 % GST
☒ Unlimited – M3	8500 + 18 % GST

☒ **4 Wheelers: Unrestricted Class: Class N**	
Class	**Entry Fees**
Unrestricted N1	9500 + 18% GST

☐ **4 Wheelers: ET Novice: Class O (Two wheel drive)**		
Class	**Minimum Elapsed Time**	**Entry Fees**
☐ Upto 1150 cc – O1	18.25 secs	
☐ 1151 cc – 1450 cc – O2	17.75 secs	
☐ 1451 cc – 1650 cc – O3	17.00 secs	
☐ 1651 cc – 2050 cc – O4	16.00 secs	
☐ 2051 cc – 2550 cc – O5	15.50 secs	
☐ 2551 cc – 3060 cc – O6	14.00 secs	

☐ 3061 cc – 4002 cc – O7	13.25 secs	

☐ **4 Wheelers: ET Professional: Class P (Two wheel drive+ four wheel drive + Imported cars)**		
Class	**Minimum Elapsed Time**	**Entry Fees**
☐ Upto 2550 cc – P1	13.50 secs	
☐ 2551 cc – 3060 cc – P2	13.00 secs	
☐ 3061 cc – 4002 cc – P3	12.40 secs	
☐ 4003 cc – 5100 cc – P4	11.50 secs	
☐ 5101 cc and above – P5	9.60 secs	

PROMOTER CLASSES

☐ **4 Wheelers: PROMOTERS CLASS H**	
Class	**Entry Fees**
VROOM VW POLO OPEN H i	7500 + 18% GST
VROOM SKODA VRS OPEN H ii	8500 + 18% GST
H iii	
H iv	
H v	
H vi	

Entry fees are inclusive of taxes applicable.

4.5 **Payment**

The entry fees can be either by demand draft in favour of Vroom payable at Bengaluru or by cash or by wire transfer.

Name of Bank	ICICI BANK
Branch	COX TOWN
Nature of Account	Current
Account No.	025205004825
IFSC Code	ICIC0000252

4.6 **Refund**

Entries fees will be refunded in full only

- To candidates whose entry has not been accepted
- In case of event not taking place

The organizers may refund 50% of the entry fee to those competitors who, for reasons of force-majeure (duly accepted by the organizing committee) were unable to start in the event, only with the event being held and Competitor being unable to participate.

5. Insurance

Organizers holding a valid 2025 FMSCI Permit for an event are covered for

Competitors: A maximum of 250 competitors with valid FMSCI Competition License participating in various events across the Country on a given day are covered for Personal Accident Insurance for Rs. 5 lakhs with Rs. 5 Lakh medical expense extension per person.

Officials: A maximum of 100 officials officiating in various events across the Country on a given day are covered for Personal Accident Insurance for Rs.25 lakhs with Rs.5 lakh medical expense extension per person.

THESE INSURANCES ARE ISSUED BY UNITED INDIA INSURANCE COMPANY LTD AND VALID DURING THE RUNNING OF THE EVENT ONLY. ORGANIZERS / COMPETITORS ARE ADVISED TO TAKE ANY ADDITIONAL INSURANCES THEY MAY DEEM FIT. IF THEY HAVE MORE THAN 100 OFFICIALS & ALSO REQUIRE DOOR TO DOOR COVERAGE PLEASE CONTACT: S.MANIKANDAN@STENHOUSE.IN

Third Party Liability Insurance (Minimum 50 lakhs) taken by the Organizers

Dates covered:12th to 14th Dec 2025

Amount:TBA

Company:TBA

6. Advertisement and Identification

6.1 It is compulsory to carry organizers advertisement on the competing vehicles throught the Event. Any infringement of this rule results in Disqualification.

6.2 Competitors are allowed to affix any kind of advertisements on their vehicle provided that

- All instructions issued by the organisers are to be observed.
- It is authorized by the National laws and FMSCI regulations
- Advertising must not be of a political, obscene or insulting nature. It must be in good taste and not conflict with the vehicle's official numbers in any way
- It should not be placed as to prevent recognition by Officials or Marshals.
- The space designated in Appendix '1' of the Supplementary Regulations should be strictly adhered to. The Competitors are free to use the remaining space in the vehicle.
- It does not encroach upon the spaces reserved for number plates and windscreen strips,
- It does not interfere with the driver's vision through the windows.

7. Administrative checks

7.1 **Documents Submission**

Entrants should produce the following for inspection at the time of submitting the vehicle for pre-event scrutiny and administrative check on the date / time as mentioned in Art.3.

Competitors are required to bring:

i) Special Drag Insurance cover valid for the dates of the event (Recommended)

ii) Authority letter from owner of the vehicle if the driver / rider is not the owner of the vehicle used in the event

iii) FMSCI Competition License for Driver (Minimum One Event Licence upto and including Open Status. Apply online from licence.fmsci.co.in for Club Sport / National Licence.

iv) Entrant Licence / FMSCI Registration (if any)

v) Pan Card copy of Competitor

vi) 3 Passport size photographs

Competitors are required to carry all the above documents throughout the event. All the documents shall be valid for the date of the event.

8. Pre-event Scrutineering, Sealing and Marking

8.1 Pre event scrutiny Venue & Timings

Place : TANEJA AEROSPACE HOSUR , Belagondapalli Village, Thally Road, Denkanikotta, Taluk, Belagondapalli, Tamil Nadu 635110 https://maps.app.goo.gl/oNaCgW64MuZCqYyR9

Date : 12th Dec 2025

Time : 9:00 hrs

8.1.1 Any Car taking part in the Event must be presented to Scrutiny either by the Driver or his official representative at the time and venue listed in the Official programme of the Event. Competitors reporting later than their Scheduled time will be charged a late Scrutinee fee of Rs 100 per minute for a maximum of 15 minutes, later than which the competitor will be disqualified.

8.1.2 Each Car must carry the Competition number and Advertisement stickers provided by the Organizer when they report for Scrutiny. The Advertisement stickers and Competition numbers should be placed as specified in the SR.

8.1.3 All Competitiors must present the prescribed Safety gear (Eg: Helmets, Overall, Shoes, Gloves, Riding suit etc) to the Scrutineer at the Pre Event Scrutiny.

8.1.4 APPEARANCE- Vehicles participating in drag racing events must be presentable in appearance at all times; those considered improperly prepared may be rejected by the scrutineer. The appearance of personnel attending contestant vehicles is equally important, and is subject to the same considerations

8.2 Competitors Briefing Venue and timings

Place : BEHING RACE CONTROL, AIRSTRIP , TAAL HOSUR

Date : 13th & 14th Dec 2025

Time : 08:00 Hrs

8.2.1 All Drivers/Riders must attend the Compulsory driver's briefing, where their attendance will be recorded. Non attendance will be reported to the Stewards and shall entail a penality of INR 2000 AND/OR Disqualification.

9. Identification of Officials

Safety Marshal	Orange
Safety Officer	Orange with white stripe and text
Post Chief	Blue with white stripe and text
Media	Green
Stage Commander	Red with text
Competitor Relations Officer	Red Jacket or Red Tabard
Medical	White
Radio	Yellow with blue mark
Scrutineer	Black

10. Prizes

1st , 2nd & 3rd Trophy + Certificate , Special Prizes & Tuner's Trophy for Fastest Times.
THE ORGANISER RESERVES THE RIGHT INCREASE THE PRIZES OR PRIZE MONEY (IFANY)

11. Protest, Appeal & Results

11.1 LODGING A PROTEST OR APPEAL

All protests and / or appeals must be lodged in accordance with the stipulations of Articles 13,14 and 15 of the Code.

11.2 PROTEST FEES

11.1.1For Closed, Closed Invitation and Open Events, the protest fees is ₹7,080/= (Rupees Seven Thousand Eighty Only) (₹6,000/= +₹1080 GST) .

For Challenge, Cups, Series, Trophy, League Events, the protest fees is ₹14,160/= (Rupees Fourteen Thousand One Hundred Sixty Only) - GST included

For National status upto International Events, the protest fees is ₹21,240/-/= (Rupees Twenty One Thousand Two Hundred Forty Only) - GST included (Refer to FMSCI Schedule of Fees on www.fmsci.co.in for details).

11.2.2 If a protest requires the dismantling and re-assembly of a clearly defined part of the bike/car any additional deposit must be specified in the Supplementary Regulations– or will be specified by the Stewards upon a proposal of the FMSCI Technical Delegate / Chief Scrutineer.

11.2.3 If the protest is overruled or it is withdrawn after being brought, no part of the fee shall be returned. (Article 13.10.1 of FIA International Sporting Code)

11.2.4 If it is proved that the author of the protest has acted in bad faith, the FMSCI may inflict upon them one of the penalties laid down in the Code. (Article 13.10.3 of sporting code)

11.3 APPEALS

₹113,280/= (Rupees One Lakh Thirteen Thousand Two Hundred Eighty Only) (₹96,000/= +₹17,280/= GST)

- Competitors may appeal against decisions, in accordance with the stipulations set out in Articles 15.1 of the Code.
- Competitors have the right to appeal against a sentence or other decisions pronounced on them by the Stewards of the meeting. They must, however under pain of forfeiture of their right to appeal, notify the Stewards of the Meeting in writing within one hour of the publication of the decision, of their intention to appeal.
- The right to bring an appeal expires 96 hours from the moment the stewards are notified of the intention to appeal on condition that the intention of appealing has been notified in writing to the stewards within one hour of the publication of the decision. This grounds of appeal may be brought by fax or by any other electronic means of communication with confirmation of receipt. Confirmation by a letter of the same date accompanied by the necessary fee is required. The FMSCI will give its decision within a maximum of 30 days.
- All parties concerned shall be given adequate notice of the hearing of any appeal. They shall be entitled to call witnesses, but their failure to attend the hearing shall not interrupt the course of the proceedings.
- The confirmation of an appeal to the FMSCI must be accompanied by a fee of ₹113,280/= (Rupees One Lakh Thirteen Thousand Two Hundred Eighty Only).
- This fee becomes due from the moment the appellant notifies the Steward of the intention of appealing, and remains payable even if the appellant does not follow up the declared intention to appeal.
- If the appeal is rejected or it is withdrawn after being brought, no part of the fee shall be returned.
- If judged partially founded, the fee may be returned in part, and in its entirety if the appeal is upheld.
- If it is proved that the author of the appeal has acted in bad faith, the FMSCI may inflict upon them one of the penalties laid down in the Code.

11.4 RESULTS

11.4.1 **The Driver recording the fastest Elapsed Time (ET) + Reaction Time (RT) will be declared as the Winner.** ET is the time taken by a Competitor to cover the prescribed distance from the Start line to the Finish line Beam. RT is the time elapsed between the green light signalling the Start and vehicle leaving the Start line.

11.4.2 Results will be posted on the Official Notice Board Official/Whatsapp group after each Class is completed.

11.4.3 Results may also be displayed on screens after each race.

11.4.4 **Tie Breaker :** In case of a tie, the Competitor with the least Reaction Time(RT) shall be declared the winner. If the tie is still not resolved the award/s will be shared by both the Competitors.

11.4.5 If a Car is disqualified for Technical or any other reason, the Car placed behind it will move up to take that position.

12. Running of the Event

Distance: 402 Metres 1/4 Mile
Width of the track:TRACK 60 FEET , 50 FEET BUFFER ZONE ON EACH SIDE BRAKING DISTANCE FROM FINISH / SHUT DOWN AREA - 800 METERS
Maximum Number of runs per day including practice:AS PER FMSCI DRAG RACING GP 2025

12.1 **BURNOUTS** ARE ONLY PERMITTED IN THE PRE STAGING AREA ON THE DRAG STRIP.

12.2 **MANDATORY OFFICIAL PRACTICE:** It's mandatory for all competitors to take at least one practice run. In case of multiple entries by a driver, a maximum of two practice runs will be permitted. All cars must self-start and self-stage. A DRIVER cannot drive more than one car in the same Class. Same vehicle can be used for multiple categories if it falls under that particular cubic capacity bracket.

12.3 **Starting Line & Staging Procedures**

The class that is to run will be announced, followed by the competition numbers of each vehicle participating in that class. **Competitors will be paired using draw of lots for each class to form the start order**. Start Order / Competition numbers will be announced in pairs in the order of racing precedence. The first pair of vehicles will be called to the starting line by their competition numbers. When the first vehicle arrives at the starting line, the second vehicle has <u>one (1) minute</u> to arrive and stage at the starting line. Vehicle that fails to stage at the starting line within one minute may be disqualified.

12.4 <u>There will be no choice of lane. Any competitor found not following the instructions of the start line marshall or any other official at the start, may be disqualified.</u>

12.5 The Starting Lights will be 3 Amber lights followed by a Green light for GO.

12.6 The Cars will be judged according to timings from the time when the green light is on up to when the driver crosses the finish line.

12.7 If a driver makes a false / jump start or jumping the lanes, the RED light will come on and the participant may be DISQUALIFIED from that particular run.

12.8 Once the vehicle has finished its run, the competitors have to go to Holding Area and wait. The vehicle will only return behind the 'OFFICIAL SAFETY CAR' under the instruction of the holding area marshall OR in the absence of safety car, the competitors will have to wait in the designated area to be escorted back by the organizers in accordance with their instructions. **Parc Ferme Rules Apply in the Holding Area**. Any competitor found violating this rule will be disqualified.

12.9 The procedures and other details of the drag shall be informed to all competitors at the **Drivers Briefing Official / Whatsapp Group / Official Mobile Application**

12.10 The CLASS & CATEGORY Winners will be determined by the fastest timings. All class/category-winning vehicles will be then taken to Parc Ferme for post event scrutiny.

12.11 The car used for practice cannot be changed on the race day. If done will entail disqualification. Any tampering with or attempt to transfer competition and scrutiny stickers will entail disqualification and the competitors will be reported to the stewards. The chief scrutineer shall be the sole authority to determine whether any such attempts have been made.

12.12 Each competitor will be issued a start card for each eligible run which should be surrendered before taking the start. A start shall not be permitted without the surrender of the card.

13 Penalties

13.1 False Start / Jump Start: A false start occurs when the vehicle moves forward or backwards from the prescribed position before the Start signal. The penalty for this is DISQUALIFICATION. The Start Marshall's decision will be Final and 60 Seconds will be added to the Elapsed Time in the results.

13.2 Refusal to obey officials of the meet may result in DISQUALIFICATION.

13.3 Driving dangerously in restricted area may result in DISQUALIFICATION.

13.4 Crossing of center line may result in DISQUALIFICATION

13.5 If a competitor arrives late for staging, he/she shall not be allowed to start

13.6 Any driver found riding fast, rashly or negligently, or practicing or tuning their cars on the track, may be DISQUALIFIED.

13.7 Any competitor who does not have his / her I.D. Tag may not be allowed to start.

13.8 There will be a maximum speed limit of 60KMPH on the return run. Any competitor found breaking this speed limit MAY BE DISQUALIFIED

13.9 The Stewards of the meet may adjudicate on any matter not covered by these regulations and impose penalties in accordance with the Code.

13.10 Burnouts are PERMITTED only in the pre stage area.

13.11. A participant found not conforming to these Supplementary regulations or by refusing to make their vehicle available for inspection may be disqualified from the event.

13.12 The car used for official practice cannot be changed on the race day. Any infringement of the rule will result in Disqualification.

14. Safety Requirements

Please refer General Prescriptions and Technical Regulations.

Names and photographs of CRO's

Name:TARIQ MOHSIN	Name:
Contact Number:+917022450500	Contact Number:
Email;tariq.m@vroomgeneva.com	Email;

Will be present at :

- At the Secretariat.
- At the start of the scrutineering.
- Near the "PIT AREA".

Competitors Briefing , Pre event Scrutiny d Post event scrutiny

The competitors briefing will be held at a time and venue noted under point 8 above. All competitors MUST attend the briefing where an attendance register will be maintained. Non attendance will be reported to the stewards and shall entail a penalty of Rs2000/ and or disqualification.

Any vehicle taking part in the event must be pr presented by the competitor or his official representative to scrutineering at a time and venue noted under point 8 above. Competitors not adhering to the schedule will be charged a late scrutiny fee of Rs100/minute for a maximum of 15 minutes after which the competitor will be excluded. There will no refund of entry fees.

All competitors must present the prescribed safety gear (Eg: Helmets, overalls, shoes, gloves, riding suit etc) to the scrutineer at the pre event scrutiny, and the vehicle must be presented with the competition number decals affixed.

All competing vehicles will remain in the Parc Ferme until officially released by the organiser. The top 3 or 4 competitors may be subjected to compulsory post event scrutiny. The FMSCI Technical delegate or Steward can at their discretion can dismantle and scrutinise any vehicle at any given time during the course of the event.

ADDITIONAL SUPPLEMENTARY REGULATIONS BY THE ORGANISER

As per the instructions of the FMSCI Drag Racing Commission, we will adhere to the following technical regulations:

- For 4-wheelers: The 2024 Technical Regulations and 2025 General Prescriptions for Drag will apply, except for the classes mentioned in the 2025 General Prescriptions.

- For 2-wheelers: The 2025 Technical Regulations and 2025 General Prescriptions for 2W Drag will be applicable.

- Reaction time will not be a factor in determining the final results. Final Time (FT) = Elased Time (ET)

- For late entry 50 % of the original entry fee will be charged extra

WAIVERS SECTION

- Any participant who deliberately delays the start or launch beyond a certain limit (more than 3 seconds) will be reported to the COC for further action.

APPENDIX 1: COMPETITION NUMBERS & ADVERTISING

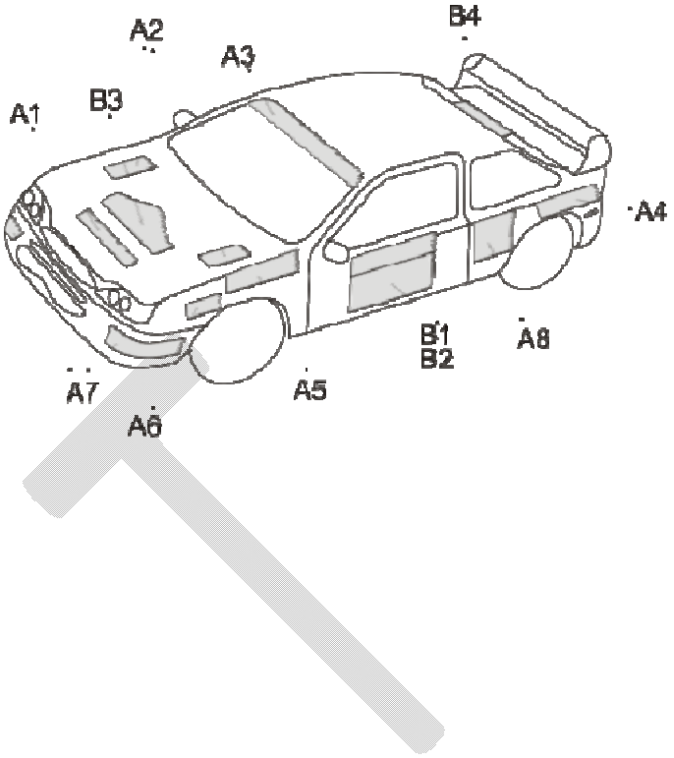

A1 : TBA
A2 : Club/Sponsor
A3 : Sponsor
A4 : Sponsor
A5 : TBA
A6 : TBA
A7 : TBA
B1 ~ B3: Competition Number

DOCUMENTATION / INFORMATION REQUIRED FOR ISSUE OF PERMIT

- Risk Analysis document duly filled in and signed by the Organizer and COC
- Safety & Medical Document duly filled in & signed both by the CMO & COC.
- Associate Hospital close by, Distance by Road and Hospital confirmation letter for acceptance of any injured participant if required for treatment.
- Track Layout Drawing, Barricading Drawing, Pits Location drawing,Paddock, Assembly Area Drawing, Scrutiny Area Drawing, COC and Stewards Area drawing.
- List of permissions applied for and acknowledgement of application from the department.
- 3rd party event Insurance copy.
- Preferred date for track inspection by FMSCI delegate.
- Details of Timing Equipment being used.

Appendix IV.

To All Participants

We, the organisers of the Vroom Drag Meet 13th Edition , follow the FMSCI Sustainability Guidelines, the FIA Guide to Sustainable Events and the FIM Environmental Code, to the best of our abilities, for the future of our sport, and to respect nature and the environment. We ask you to

- use an environment mat or other approved system while servicing or refuelling in order to prevent spillage of oil and fuel into the ground.
- use the oil collection containers available in the pits when disposing of used oil.
-bring refillable water bottles.
- use waste bins for all rubbish.
- please leave your pits/ service area clean, so that there is no trace of your activity.
- not leave used tyres or parts behind. Dispose of them correctly.
-Download the FIA Smart Driving Challenge App to evaluate your CO2 emissions.

Please help us make our sport clean and environmentally friendly.

** END **

Note: For further queries regarding the guidelines, please contact the Chairperson, Environment and Sustainability Commission, Anita Nanjapa on +91 9442158283